JAYPEE UNIVERSITY OF INFORMATION TECHNOLOGY, WAKNAGHAT

TEST -1 EXAMINATION- 2026

M.Tech-I Semester (CE – Structural Engineering)

COURSE CODE (CREDITS): 25M11CE113 (3) MAX. MARKS: 15

COURSE NAME: ADVANCED STRUCTURAL ANALYSIS

COURSE INSTRUCTOR: Dr. KAUSHAL KUMAR MAX. TIME: 1 Hour

Note: *(a) All questions are compulsory.*

(b) The candidate is allowed to make Suitable numeric assumptions wherever required for solving problems

(c) ***Use of Scientific calculator is allowed.***

Q.No	Question	CO	Marks
Q1	A continuous beam ABC has spans AB = 5 m and BC = 7 m. The beam is simply supported at A and C and has an intermediate support at B. Span AB carries a UDL of 20 kN/m over its entire span, while span BC carries a central point load of 60 kN. Assuming constant flexural rigidity EI throughout and neglecting support settlements, determine the support moments (M_A), (M_B), and (M_C) using Clapeyron's Three Moment Theorem. Draw the bending moment diagram indicating the principal values. 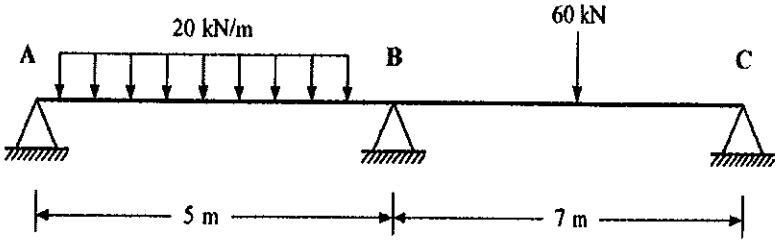	1	5
Q2	Analyze the beam using Slop Deflection Method and Draw SFD and BMD. 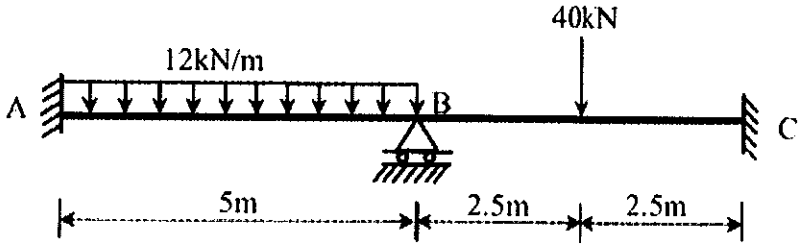	1	5

Q3	Analyze the beam using Moment Distribution Method. 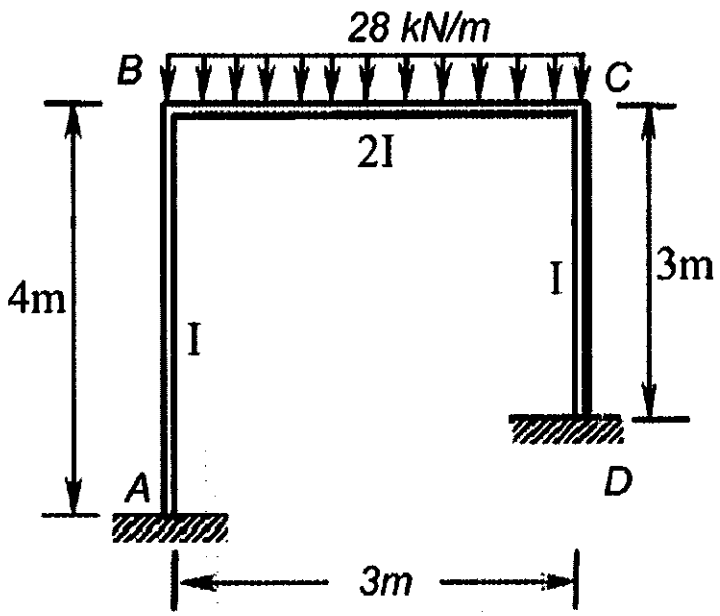 	1	5