JAYPEE UNIVERSITY OF INFORMATION TECHNOLOGY, WAKNAGHAT

TEST -1 EXAMINATION- 2026

B.Tech-IV Semester (~~CSE/IT/BT/ECE/~~CE)

COURSE CODE (CREDITS): 25B11CE415 (3) MAX. MARKS: 15

COURSE NAME: COMPUTER AIDED PLANNING AND COSTING

COURSE INSTRUCTOR: Dr. KAUSHAL KUMAR MAX. TIME: 1 Hour

Note: *(a) All questions are compulsory.*

(b) The candidate is allowed to make Suitable numeric assumptions wherever required for solving problems

(c) ***Use of calculators is allowed.***

Q.No	Question	CO	Marks
Q1	Outline the role of a Quantity Surveyor in construction work. What knowledge and hands-on skills should a good estimator possess?		2
Q2	Define and distinguish between plinth area, carpet area, and floor area. Explain their percentage relationships in residential buildings and why they matter in cost estimation.		3
Q3	Explain the standard units of measurement used for the following construction works and justify why those units are adopted: (a) Earthwork in excavation (b) Brick masonry (c) Plastering (d) Reinforcement steel (e) Doors and windows		2
Q4	Explain the different types of estimates used in civil engineering projects. Describe any one type of estimate in detail.		3
Q5	Prepare the quantity estimation for the following items using a suitable method (long wall–short wall **or** centre line method): (a) Earthwork in excavation (b) PCC in foundation (c) UCR masonry in foundation and plinth (d) Brick masonry in superstructure. Assume necessary data wherever required and state your assumptions clearly. (***Figure in next page***)		5

JUIT TEST-1 EXAMINATION-FEB-2026

112

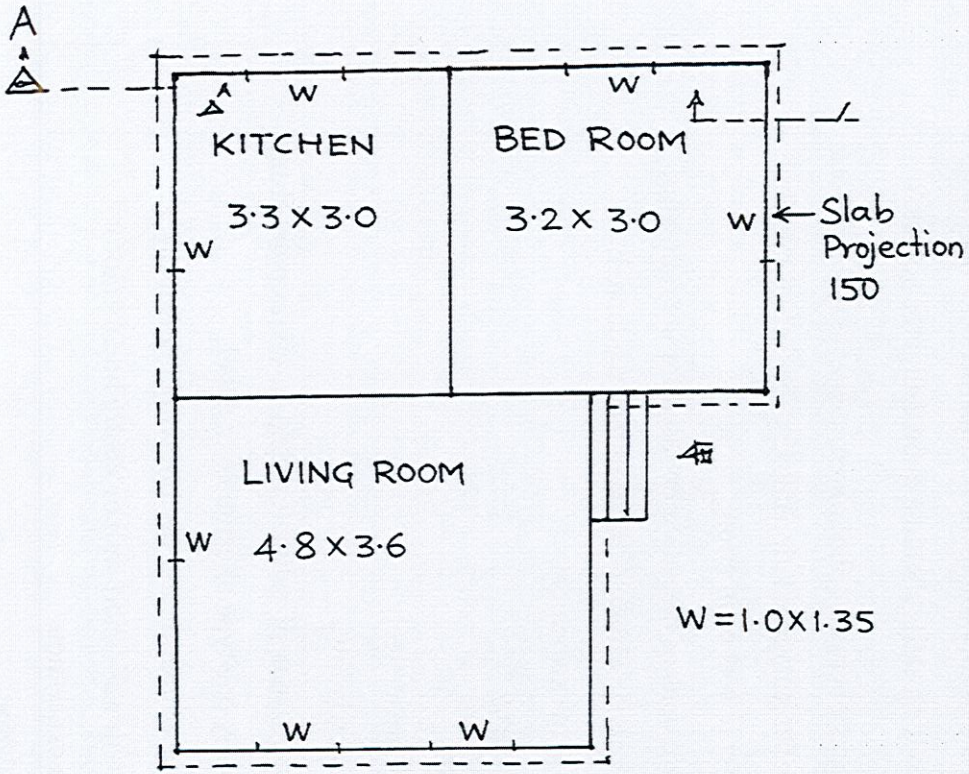

LINE PLAN (NOT TO SCALE)

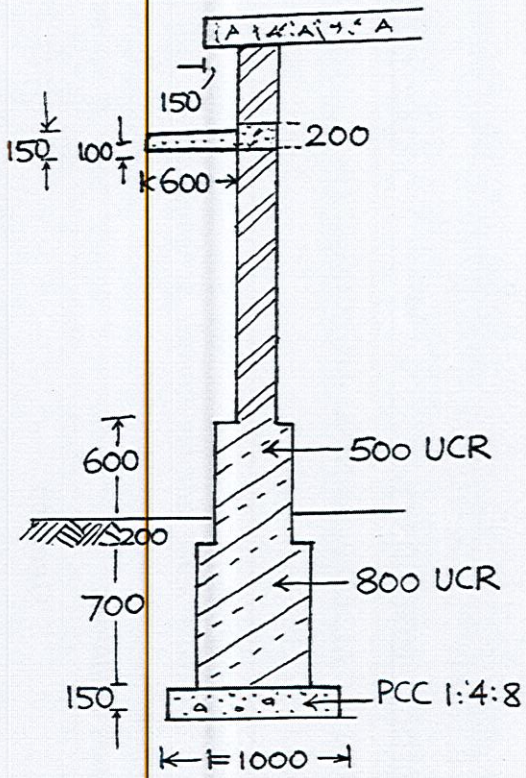

SECTION AT 'AA'